Progress on Modular Unmanned Aircraft Technology (invited)

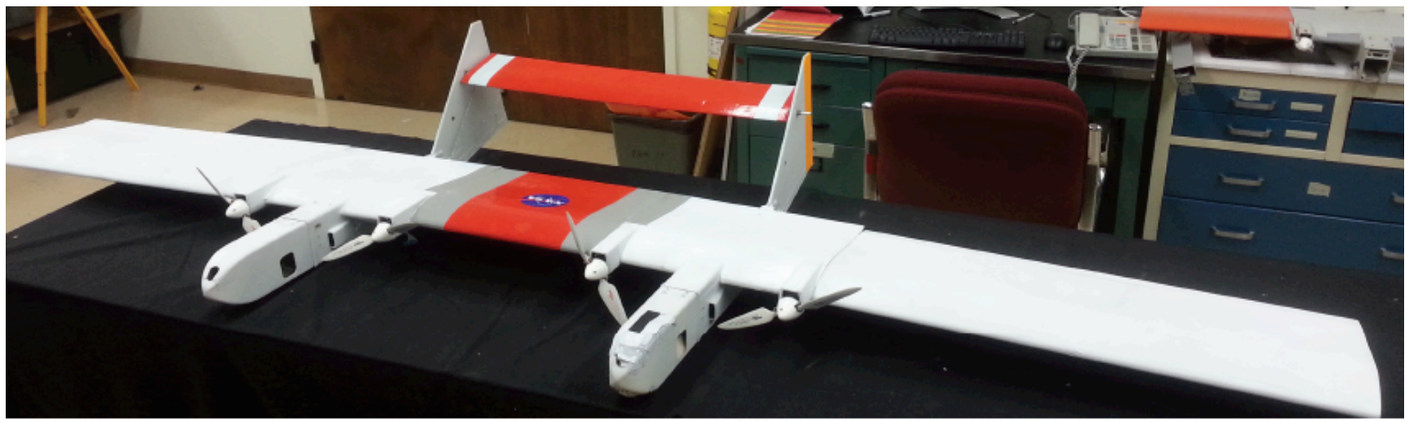

Robert Dahlgren, Ph.D.
CSUMB/NASA-Ames Research Center

Juan Alonso, Ph.D.
Stanford University, Dept. of Aeronautics & Astronautics

Matthew Fladeland
NASA-Ames Research Center

robert.p.dahlgren@nasa.gov (650) 604-0130
https://earthscience.arc.nasa.gov/person/Robert_P_Dahlgren

ASPRS UAS Mapping 2016
Palm Springs, California, USA
13 September 2016

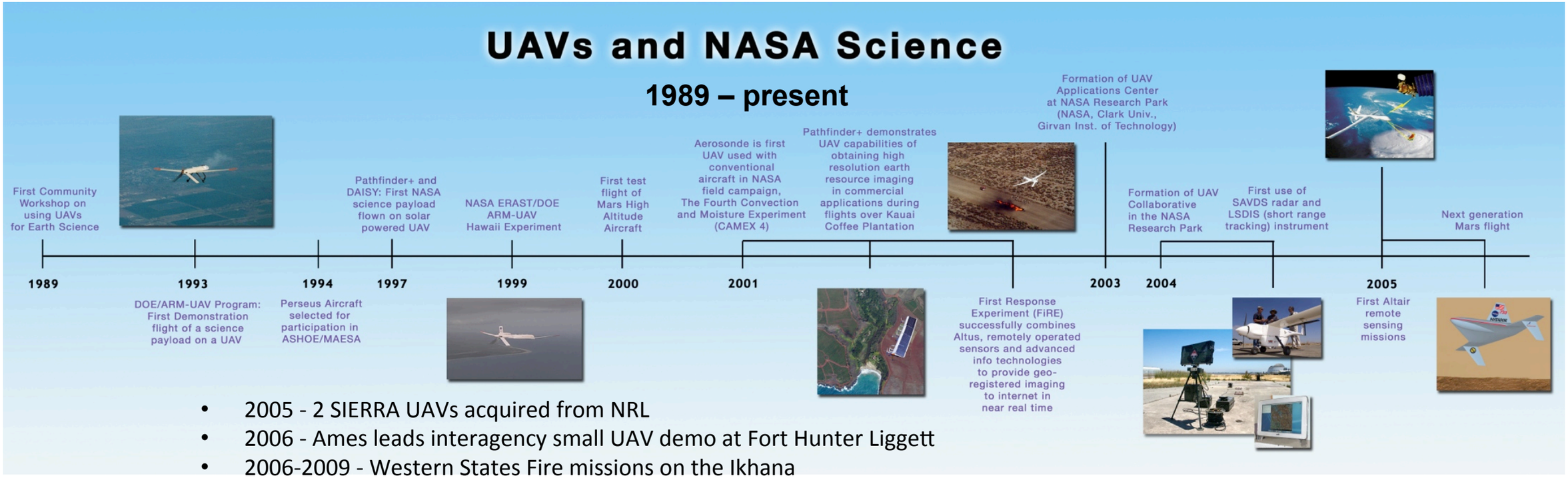

- 2005 - 2 SIERRA UAVs acquired from NRL
- 2006 - Ames leads interagency small UAV demo at Fort Hunter Liggett
- 2006-2009 - Western States Fire missions on the Ikhana
- 2008 - Stimulus funding granted for SensorNet builds on manned aircraft modeled on Ikhana architecture
- 2009 - SIERRA deploys to Svalbard for Sea Ice experiment CASIE
- 2010 - Partnered with AFRC to modify Global Hawk AV-1 and AV-6 for science; first implementation of SensorNet hardware
- 2011 - Aura Validation Experiment GloPac - first Global Hawk science mission
- 2012 - Surprise Valley magnetometer survey with USGS on SIERRA
- 2011 - Florida Keys Hyperspectral survey on SIERRA
- 2012 - **RQ-14 Dragon Eye UAVs Acquired from DOI**
- 2013 - ASTER SO_2 validation over Turrialba using DragonEye
- 2014 - **FrankenEye Student Project**
- 2013 - Viking-400 UAVs Acquired from NAVAIR
- 2014 - DragonEye swarm testing at Moffett Field
- 2015 - **LEARN-2 proposal funded by NASA Aeronautics Research & Mission Directorate**
- 2016 - **RQ-11A/B Raven UAVs Acquired from DOI**

Why Modular Aircraft?

- Modularity was a central aspect of NASA's CubeSat program
- A well-thought-out modular approach has many benefits
- Intention is to create the "CubeSat of Unmanned Aircraft"
- A Systems Requirement Workshop was held at Stanford in February

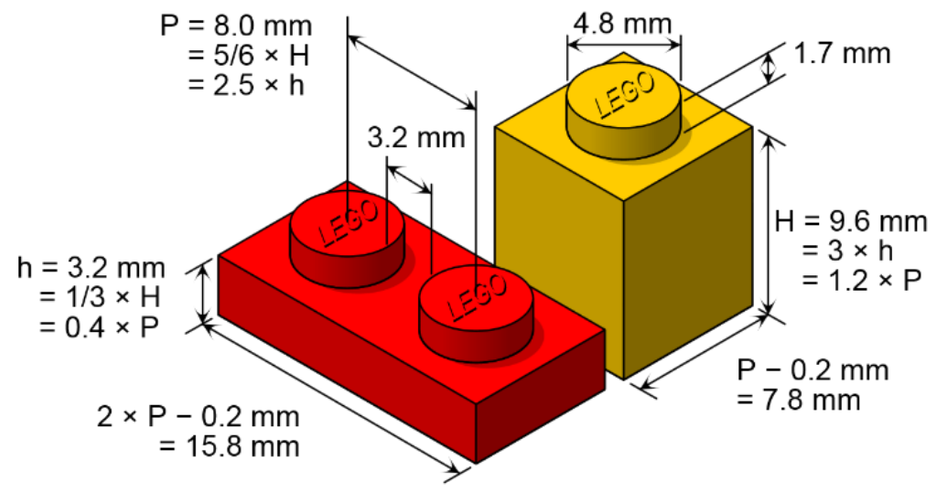

"Customizing the aircraft around the payload will revolutionize how we do our work"
-Jonathan Stock, USGS Innovation Center Program Manager

Concept

Modular UAS concept supports a wide range of autonomy research programs

- Diverse payload and sensor accommodations
- Range of vehicle size, power, speed
- Standard, flexible open source software
- VTOL and conventional flight modes
- Optimization of the platform for mission and payload

Emphasis will be placed on the development of a system that is

- Modular and Open
- Permits customization for individual research efforts
- Flexible operations over a range of scales

Research Challenges

Perception

- How do you build inexpensive sensors with low size, weight, and power?
- How do you ensure robustness to occlusions, errors, and false and missed detections?
- How do you characterize sensor error?
- How do you efficiently translate sensor measurements into beliefs about the relevant state of the world?
- How does the modular UAS "know" its configuration?

Communications

- How do build low-cost communication hardware appropriate for the ranges required for autonomous flight?
- How do you ensure robustness due to communication failure and latency?
- How to standardize interoperable electrical, mechanical, and RF interfaces?
- How do you decide what and when to communicate?
- How do you coordinate between multiple vehicles?

Research Challenges (2)

Decision Making

- How do you build models of the potentially stochastic effects of decisions?
- What objective measure should be used to assess the outcomes of decisions?
- How do you balance potentially competing objectives (e.g., safety and efficiency)?
- How do you produce robust plans when the decision space is high dimensional?
- What processing should be done offline rather than online?

Human-Machine Interaction

- What role should a human operator(s) play?
- What interfaces are appropriate?
- How should the decision making system model the behavior of the human operators to ensure robustness?

Validation

- How do we build confidence in systems before they are deployed?
- How do we build high-fidelity models from limited data?
- How do you accurately estimate the liklihood of low-probability failure conditions?
- How do we enforce hardware/software/ command validity?

Modular Hardware

- What would be a sparse but sufficient variety of module types to construct a modular UAS?
  - Fixed-wing: Scalable wingspan, thrust, control surfaces
  - N-copter: Scalable thrust, redundancy, control authority

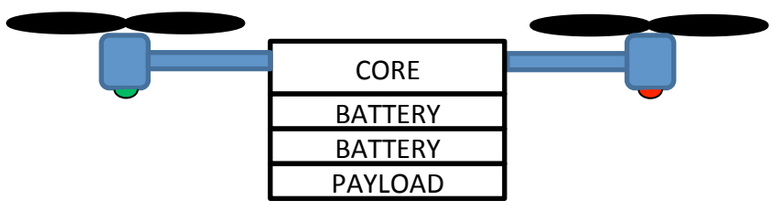

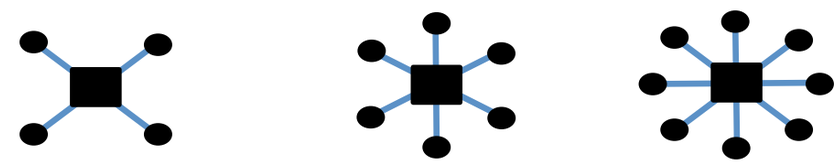

- Can the modules "know" their weights, CGs and aerodynamic characteristics and communicate them to the host platform?
- Can the host platform holistically model the configuration and enforce design rules, safety margins, and regulations for unknown payloads?
- Can a standard mechanical interface be defined?

Examples of Tradeoffs (Fixed Wing)

- Battery weight vs. payload weight and mission
- Wingspan vs. payload+battery weight and mission
- Control surface size vs. mission

What is the price to pay for modularity?

- More weight
- More complexity
- Reduced strength, structural efficiency
- Reliability, ruggedness
- Aerodynamic drag
- Regulatory?
- Higher cost?

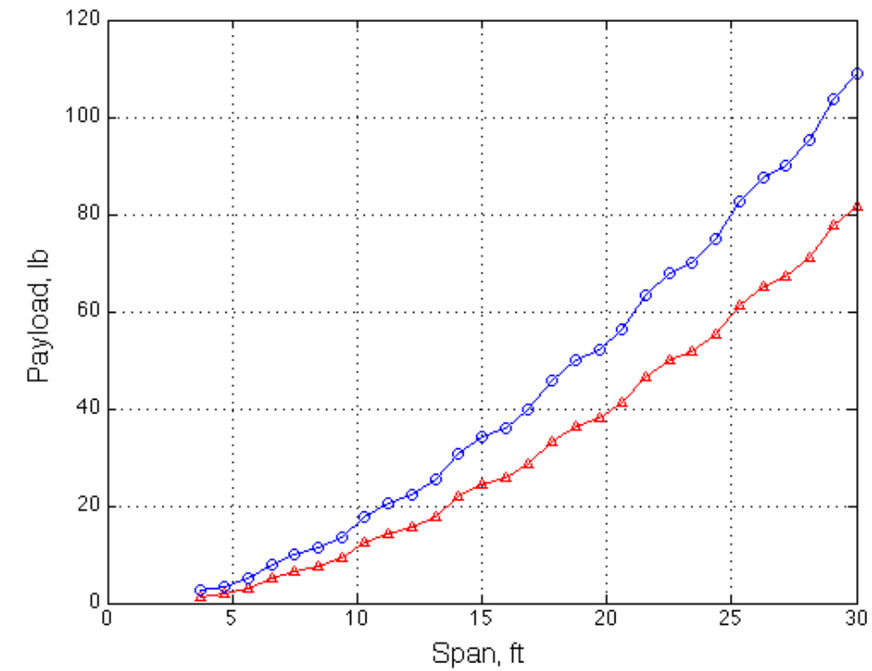

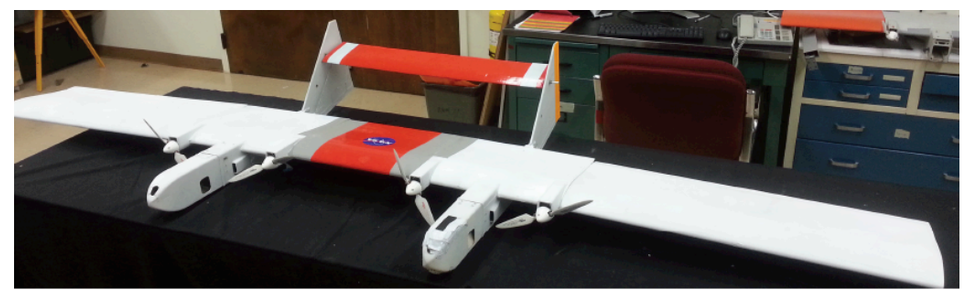

Tradeoff Space

Example for Fixed-Wing Design

- Tradeoff of wing area vs. weight and range
- Same flight profile but with varying cruise distances
- Fixed structural, payload, and electronics
- Calculated battery mass
- Fixed aspect ratio of 7.5, same as prior vehicle
- Missing feasibility constraints

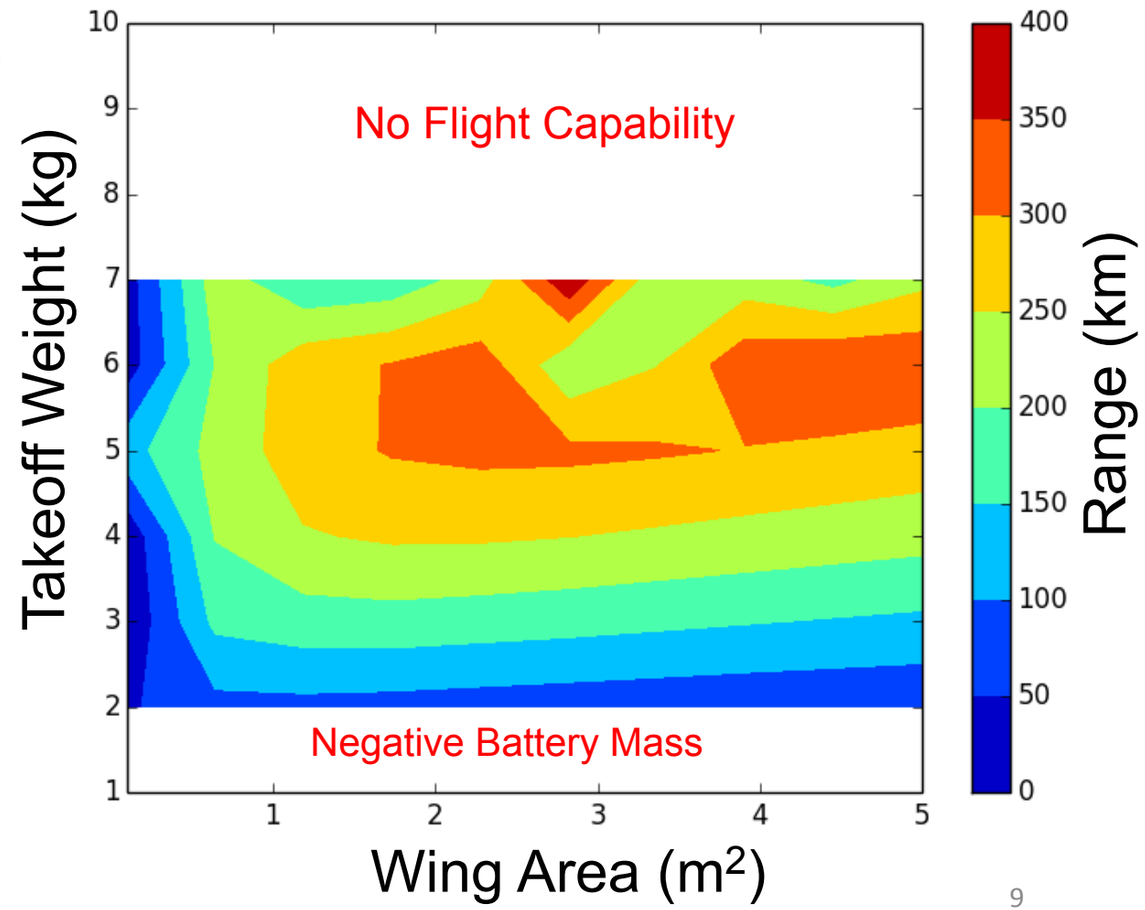

Challenges and Questions (Architecture)

Fixed-Wing Design

- Can a structurally efficient spar joint be designed?
- Can a standard mechanical interface be defined?
  - Difficult with innumerable airfoil, fuselage, and empennage designs
  - Strong dependences on launcher
- Minimum module set
  - Fuselage (including nose and battery)
  - Wing modules (can include propulsion, batteries?)
  - Boom/rudder/elevator module

N-copter Design

- Scale number of boom/motor/rotors
- Similar problems and interactions

Challenges and Questions (Software)

- How to make standard control interfaces for actuators, ESCs, sensors, telemetry, models, etc?
- Testing at unit and system level
- V&V: Reference implementation, benchmark tests
- HITL and SITL support
- Software interchangeability
- Developer tools
- Visualization & debugging
- Release processes, compatability, configuration control

Our Approach: Collaboration, Modularity, and Simulation

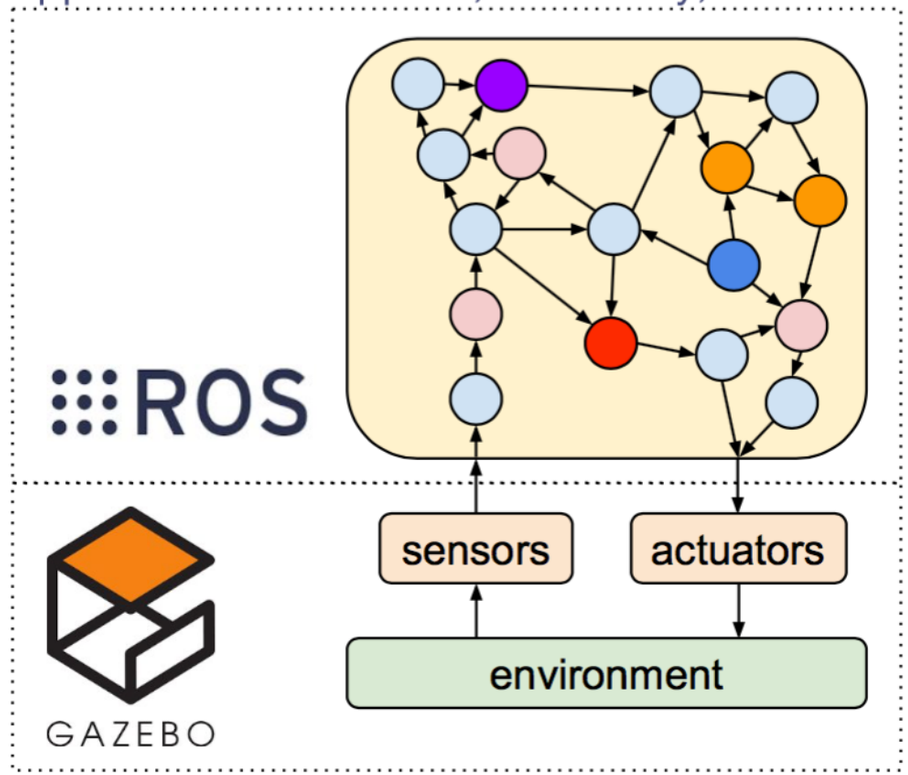

Open Source Robotics Foundation

The Robotic Operating System (ROS) platform has been adopted by many of the organizations on the forefront of UAS technology, including 3DRobotics, Parrot, Qualcomm, Intel, DroneDeploy, Yuneec, Walkera, and others.

Challenges and Questions (Propulsion & Energy Storage)

- Can a modular battery architecture be designed?
  - Cannot mix batteries with different chemistries
  - Nontrivial to mix and match battery packs
  - Redundant power storage
- Can the batteries report their weights, CGs and electrical characteristics to the host platform?
- Can a standard be defined for spanwise (in the case of fixed wing) redundant power distribution?
  - Shrouded, blind-mate connectors between modules
  - 2x or 3x redundant power bus
  - Move to higher voltages to minimize I^2R losses
- Can a standard be defined that supports a wide variety of ESC manufacturers?
- Can the propulsors report to the host platform?

Challenges and Questions (Modular Payloads)

- Payloads integrated into interchangeable nose cones
- Payloads in various size pods
- Can a standard mechanical interface be defined for payload mounting?
- Can a payload "know" its weight, CG, and electrical load, and communicate them to its host platform?
- Can an experiment interface panel (EIP) be designed?
  - Small, lightweight, "smart" features, gimbal C&C…
  - Hot plug, blind mating, isolated digital interface…
- Can a standard autonomy interface be defined?
  - Using safety mux, or entirely redundant autopilot
  - Autopilot "Firewall" or other approach

FrankenEye Project Overview and Structure

- Conceived as an ARC summer intern project
- Interns recruited through many programs
  - Intensive design, build, certify, and fly project
  - Teams were provided raw materials
  - Access to rapid prototyping equipment in the Ames Research Center SpaceShop
  - Multiple teams encouraged competition-cooperation
- 3 teams developed their designs using subcomponents from the RQ-14s
- Mechanical and aero design and modeling
- UAV development and missions are interdisciplinary, and interns had to work across several organizations at NASA Ames

Ames obtained 72 AeroVironment RQ-14 “DragonEyes”

Surplus RQ-14 from Desert Storm (circa 2006 technology)

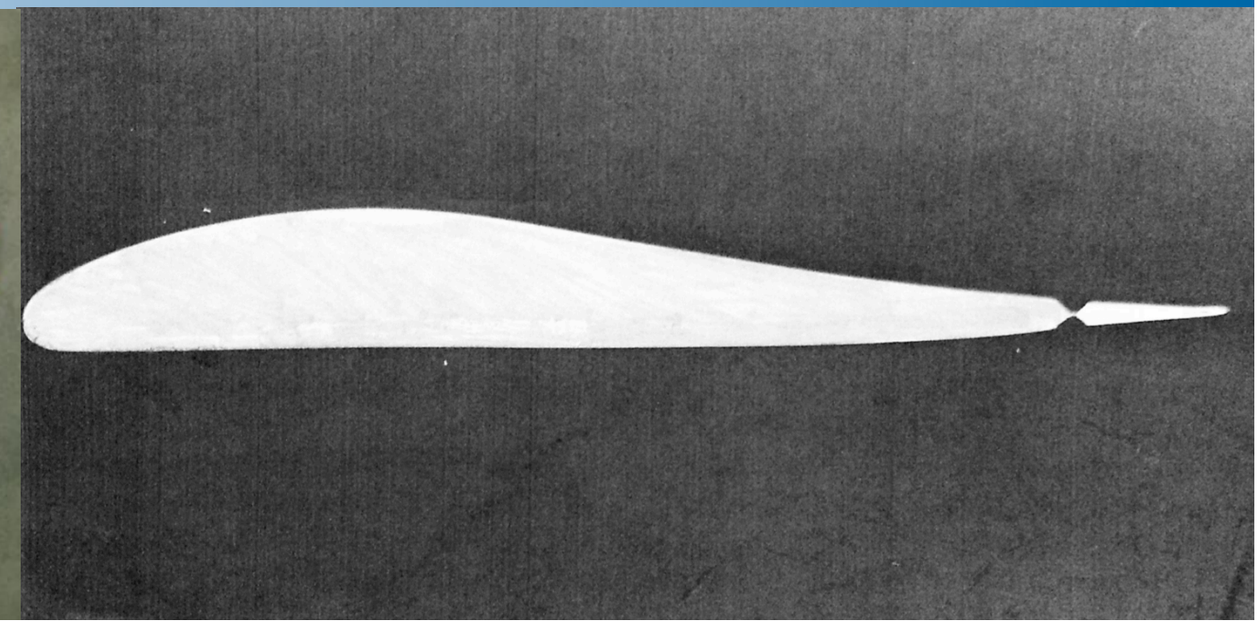

Wing cross-section (constant across span)

Original Design

Components: Five
Dual electric propulsion
Folding propellers
Swappable payloads
Wing Span: 114 cm (45 in)
Wing Chord: 30.5 cm (12 in)

Performance

Autonomous Operation
Operational Weight: 2.3 kg (5 lbs)
Payload Weight: 0.5 kg (1 lb)
Cruise Speed: 65 km/hr (35 kts)
Altitude: 150 m (500 ft) AGL
Endurance: 45 – 60 minutes

Original Wing Design

- Rectangular wing shape
- No twist or taper in wing
- Kevlar-covered foam core
- Aluminum and Kevlar spar
- Favorable stall characteristics
- Cam-out attachment points

Approach: Make Best Use of Resources

Goals:

- Reduce small aircraft development cycle to *weeks* rather than months/years
- Demonstrate reuse of modular airframe subcomponents in multiple configurations
- Demonstrate the usefulness of rapid prototyping as a creativity multiplier

Vision:

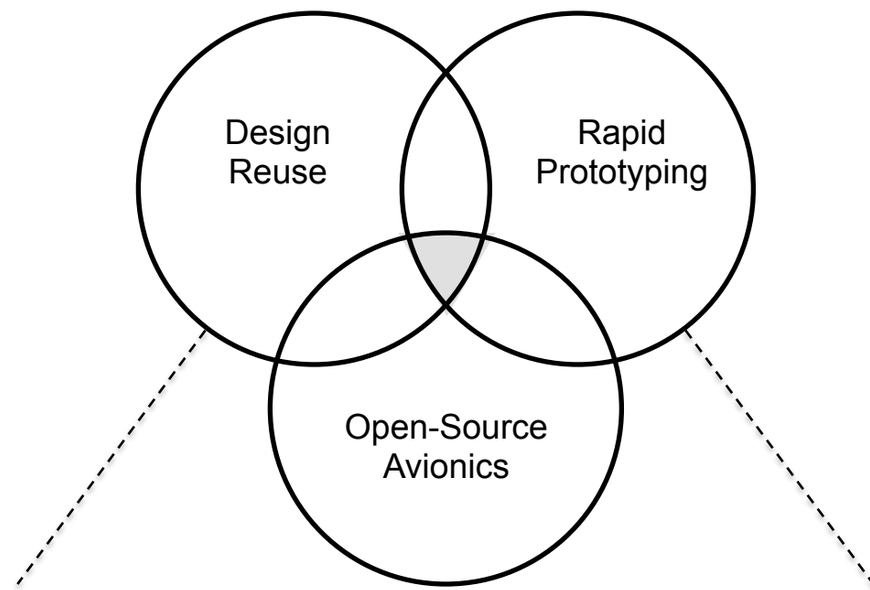

Students

AFSRB

FRRB

How:

Modular Airframe

NASA Common Avionics Architecture

NASA SpaceShop

Approach I: Design Reuse

Example: AeroVironment RQ-14 Dragon Eye UAS

Not to Scale

- Original RQ-14 design is inherently modular to enable compact storage
- Design reuse of well-proven, heavy duty airframe facilitated approvals
- Recycled nine (9) surplus RQ-14s and disassembled into parts inventory

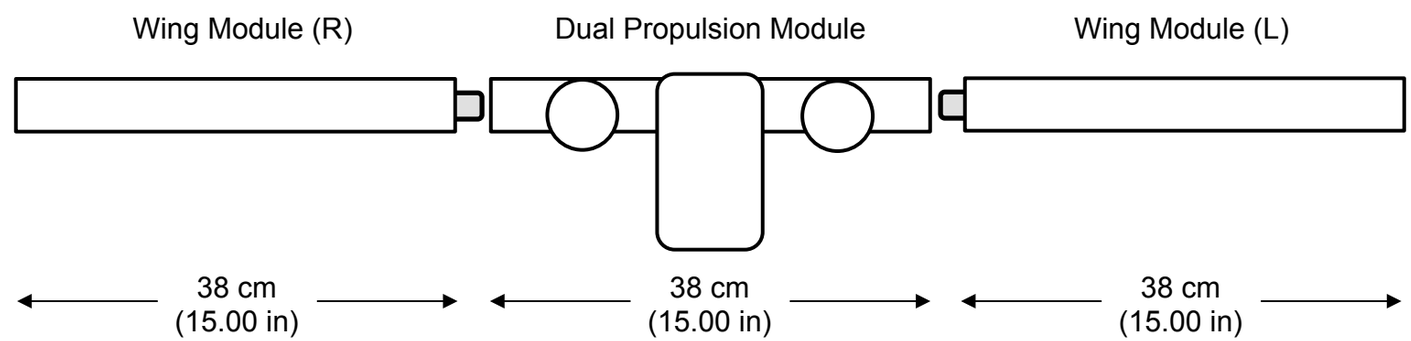

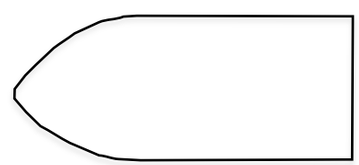

Nose

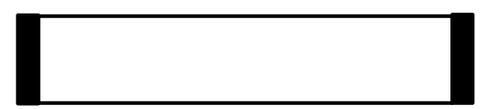

Battery

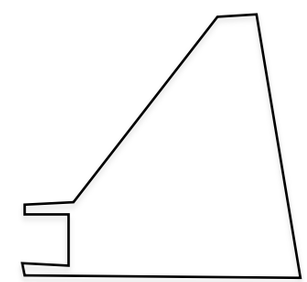

Tail

Example of Interchangeable Sensor Payloads for Dragon Eye Earth Science Missions

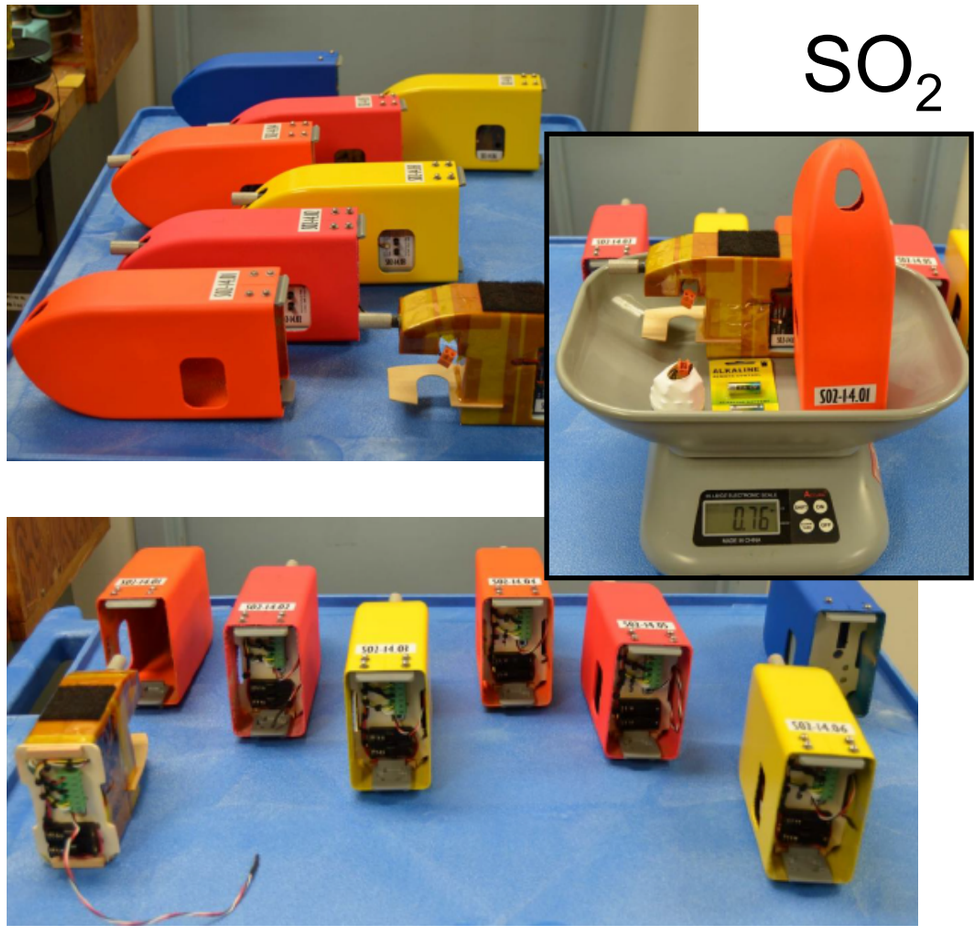

SO_2

Nose #	Wt (lbs)	CG (in)
1	0.76	3.5
2	0.72	3.5
3	0.72	3.5
4	0.66	3.6
5	0.67	3.6
6	0.65	3.6

Images courtesy G. Bland, NASA-WFF

One aircraft- multiple interchangeable distributed sensors

Approach II: Open-Source Avionics

Common Avionics Architecture

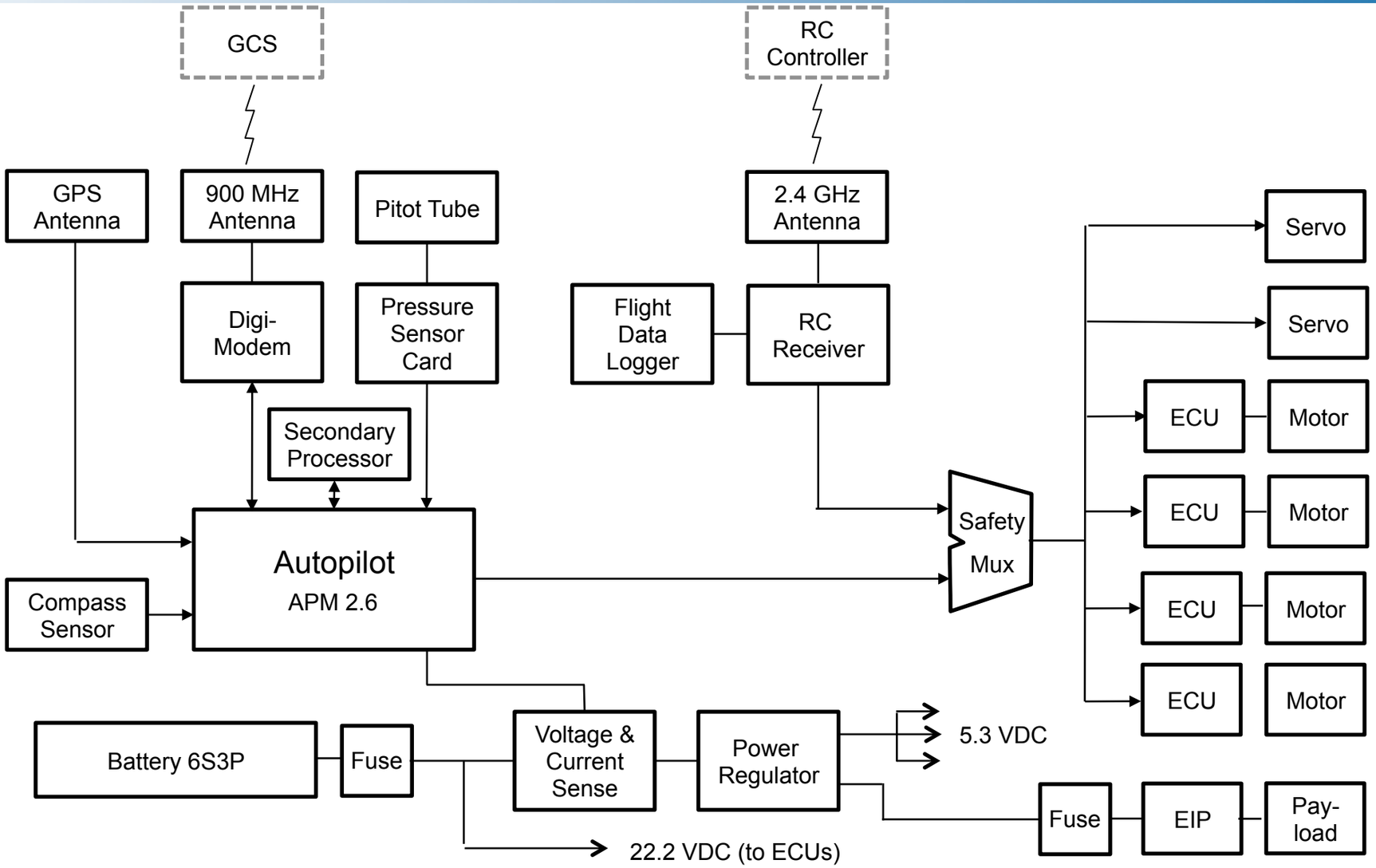

Approach III: Rapid Prototyping

NASA Ames SpaceShop Facility

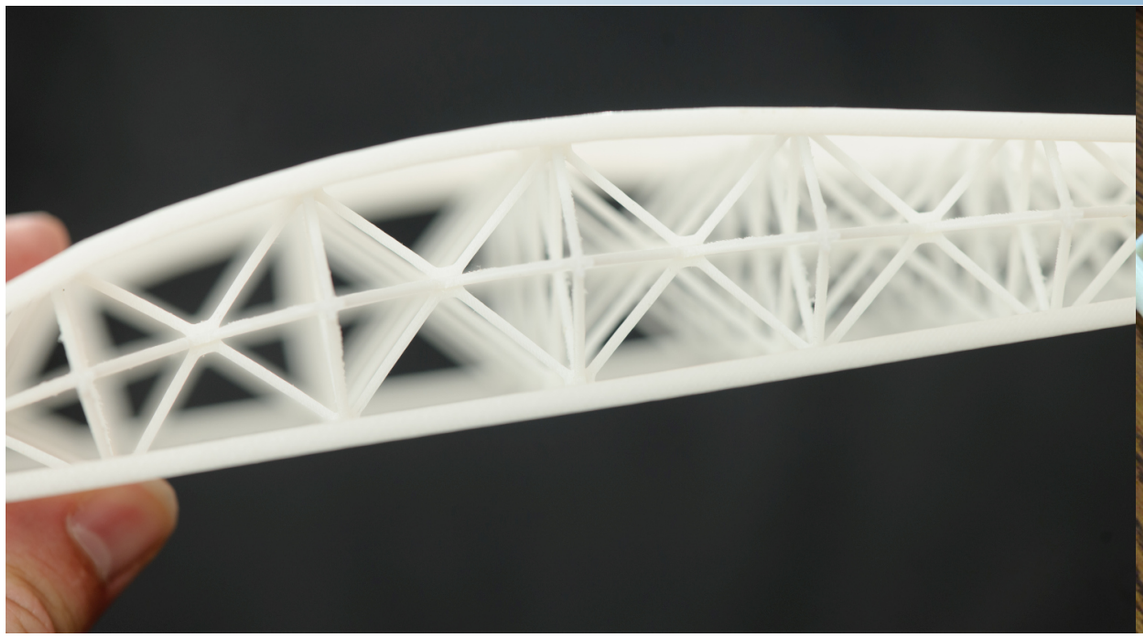

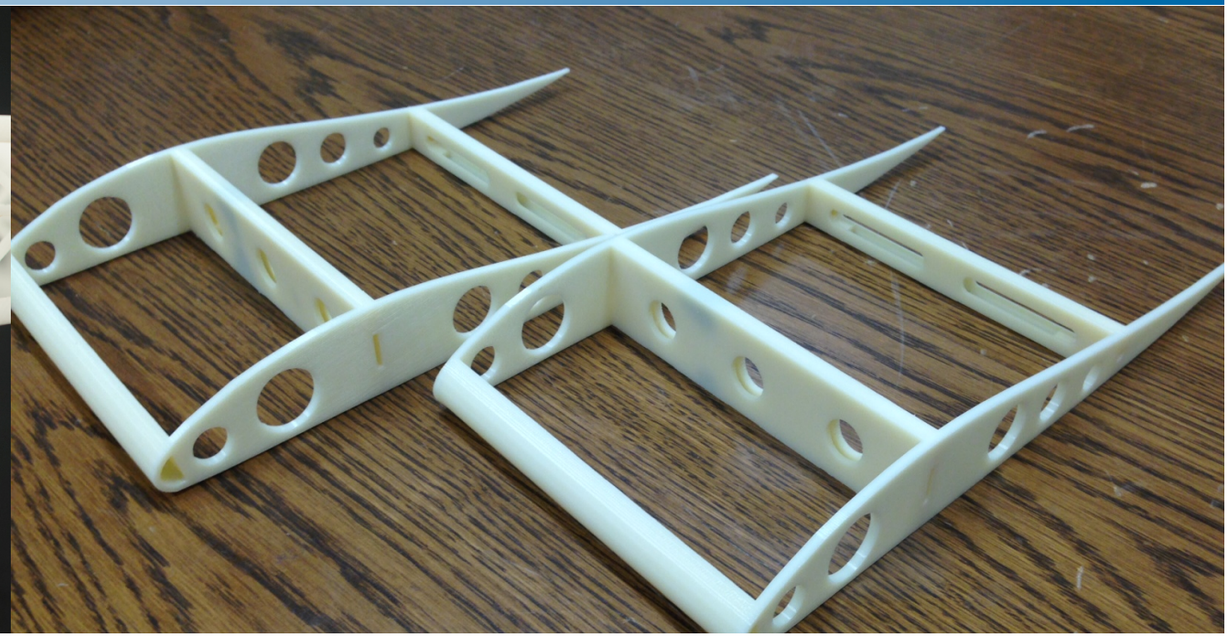

- In-house “Makers Space” with 3D printing, scanning, and CNC equipment
- Designed <u>splice</u> components to join modular wing sections into larger structures
- Modularity enabled straightforward recombining into new configurations
- Fused deposition modeling (FDM) optimized with reinforced spar, e.g. 2024 aluminum

Modular UAV Design Space: DragonEye Example

Concepts proposed by three teams:

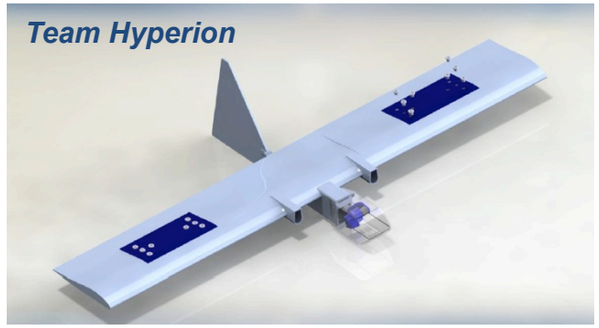

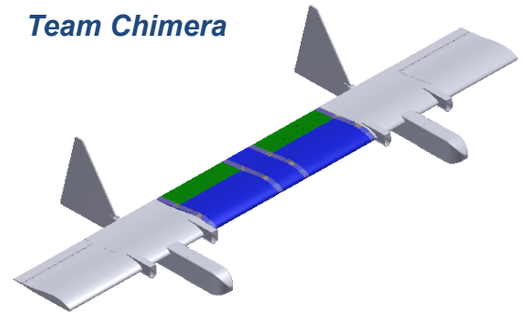

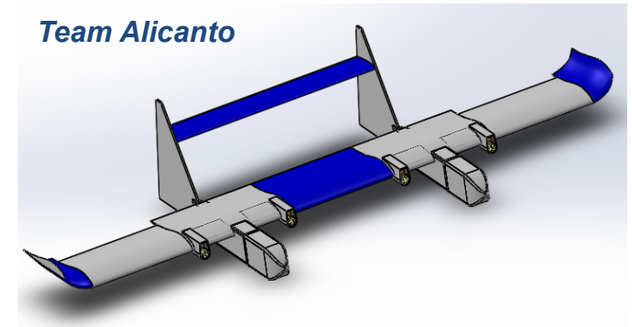

Aspect Ratio	Base Wingspan	Launch	Motors	Winglets	Tail Mod	Control System	Imaging
Low 3:1	45.00”	H/V	2	Y/N	N	Tune	
Medium 5:1 Hyperion	75.00”	H/V	3	N	N	Tune	Top mount Gimbaled
Medium 7:1 Alicanto	84.00”	H/V	4	Y	Y	Mod	Fixed
High 8:1 Chimera	95.00”	H/V	4	N	N	Tune	Pod mount Gimbaled
Biplane	45.00”	H/V	2	Y/N	Y/N	Mod	

◂ DragonEye

H=horizontal
V=vertical

These 3 designs were presented to the Airworthiness and Flight Review Boards

ARC Test Ranges for Small UAVs

- After demonstration of the safety margin of their splices, 2 designs were approved
- NASA provided statements of airworthiness / flight readiness
  - NASA brings flexibility within a recognized framework
- Operate under NASA/FAA MOA at Crows Landing Airfield (85 miles E of San Jose)
  - Simple online notification (1 hour prep)
- Operate under COA at Moffett Field (Mountain View, California)

Moffett Field, SF Bay Area

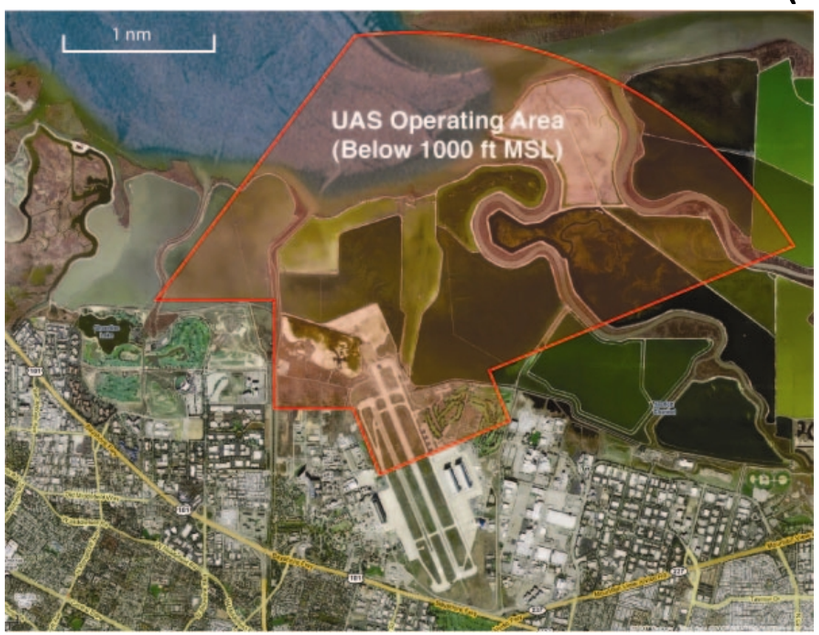

Crows Landing, Central CA

FrankenEye Project Accomplishments

- Demonstrated that multiple airframe designs could be made, even when constrained to a small set of submodules
- Shared facilities like SpaceShop enabled multiple hardware iterations during the short (3 month) program
- Demonstrated the utility of 3D printed parts as structural elements, through lab testing and flight certification
- Demonstrated expanded common avionics architecture
- Not having the latest technology for the raw materials did not hinder success
- Two UAV designs were selected to be developed and flown
- Obtained NASA airworthiness and flight statements
- Nine successful flights with zero mishaps
- **Concept to flight in < 8 weeks!**

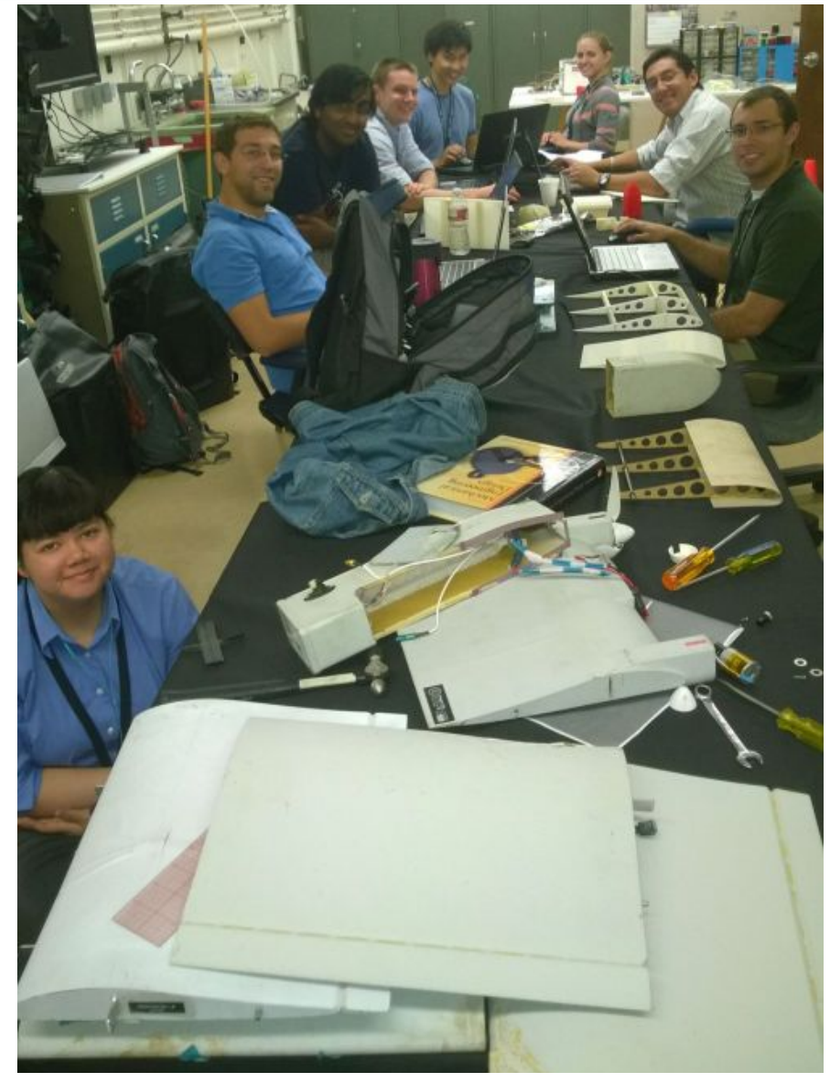

Conclusions

- Scalable, modular UAV designs are possible using a small set of components
- Modular design enables piecewise customization of the aircraft around the payload
  - Normally one has to modify a given payload to a given airframe
  - Revolutionary development for the Earth science community
- Wing span as a design parameter allows for very powerful tradeoffs to be performed in flight dynamics and performance
- The combination of modular and distributed electric propulsion, distributed computing, and distributed sensors presents a new design space for UAS
- Low-cost systems can be combined in optimal ways using rapid prototyping methods to make the whole more than the sum of the parts

Acknowledgement: This project was funded by the NASA Ames Center Innovation fund (CIF), the NASA LEARN-2 Program, and the USGS Innovation Center for Earth Science (ICES). Special thanks to the NASA Applied Science Program (ASP) and V. Ambrosia for providing travel funding, and the U.S. Navy NREIP and LCDR L. Svec.

Reference: K. Reynolds, R. Dahlgren, et al., "Repurposing surplus unmanned aircraft systems into UAS platforms for science missions," presented at the AUVSI 2015 Annual Meeting, Atlanta, Georgia, May 2015.