*The Pantograph and Its Application to Stereocompilation**

B. THOMAS HOPKINS,
U. S. Geological Survey,
Arlington, Va.

ABSTRACT: *This paper presents a history of the development, by the Geological Survey, of a reduction pantograph for use with stereoplotting instruments of the double-projection type. A description of the desirable features of a variable-ratio pantograph for use with the Kelsh Plotter, ER-55 projectors, or Multiplex, is given. The advantages derived from the use of a reduction pantograph in map compilation are discussed. A brief description of compilation techniques, insofar as they differ from those employed in compilation at model scale, is presented. Checking and calibrating methods are discussed and a practical method utilizing relatively simple equipment is suggested.*

INTRODUCTION

THE pantograph is an instrument for the mechanical copying of diagrams, drawings, or similar information, at a scale other than that of the original. Specifically, in its adaptation to stereoplotting instruments, it reduces the scale of the stereomodel to a more desirable scale for compilation.

The pantograph in current use in the Geological Survey, on stereoplotters of the double-projection type employing the anaglyphic principle, is a precision variable-ratio instrument with graduated arms providing a range of reduction ratios from 1.45: to 6.5:1 (Figure 1). It is fully supported from the king-post by a cantilever main arm, with provision in the design of the king-post for levelling the pantograph. Other refinements are a track providing for movement of the king-post in the *y*-direction, low-friction bearings for easy movement, a magnetic pencil lift, and illumination of the pencil point. Pantographs of this type mounted on double-projection stereoplotters have increased the versatility of these instruments to a point approaching that of the heavy plotters.

The problems involved in developing a variable-ratio pantograph of acceptable precision should not be underestimated. Although apparently simple in theory, the realization of an instrument meeting the required accuracy was accomplished at the cost of considerable development effort.

THE NEED FOR VARIABLE-RATIO PANTOGRAPHS

The desirability of compilation scales smaller than the natural stereomodel scales, for the preparation of small- and medium-scale topographic maps by stereoplotting instruments, has long been recognized. Such scale reductions result in economy during compilation and in the successive steps leading to reproduction. Lack of an adequate means of reducing the natural model scale to a more desirable compilation scale limited the economy of operation and versatility of double-projection stereoplotters. The development of the precision variable-ratio pantograph coupled with the techniques of compilation scribing have placed the newer double-projection stereoplotters in competition with the heavy plotters in many ways.

HISTORY OF DEVELOPMENT

The development of a reducing pantograph specifically for the double-projection type stereoplotter, employing the anaglyphic principle, was an outgrowth of the introduction of the Kelsh plotter in the Geological Survey. Compilation at

* Presented at the 22nd Annual Meeting, American Society of Photogrammetry, Washington, D. C., March 23, 1956. Publication authorized by the Director, U. S. Geological Survey.

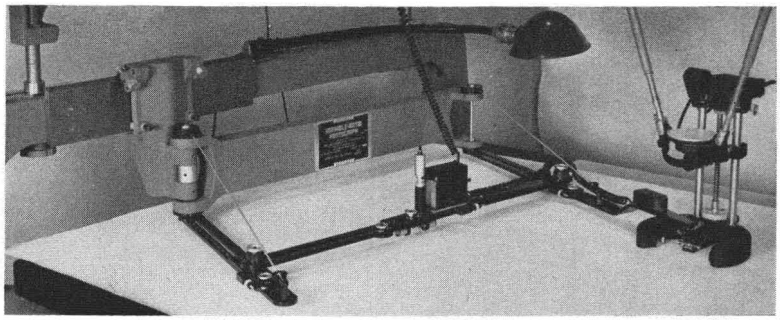

FIG. 1. The variable ratio pantograph.

the natural Kelsh model scale proved to be economically impractical, and a fixed-ratio pantograph, providing a reduction of 2:1, was mounted on an auxiliary table at the side of the instrument. This experiment conclusively demonstrated that a pantograph mounted on a double-projection stereoplotter was both feasible and economically desirable. Succeeding models of the Kelsh plotter were designed to provide a working surface beneath the pantograph and a suitable mount for the king-post. Further experience indicated the desirability of a common compilation scale, at any given flight height, for Kelsh and Multiplex plotters so that the instruments could be utilized in combination.

A number of Kelsh plotters equipped with pantographs providing a fixed ratio of 2.1:1 were put into operation in 1952. The fixed-ratio pantograph proved satisfactory for its original objectives; however, it soon became evident that this type of pantograph limited the versatility of any stereoplotting instrument.

During this period the technique of compilation by scribing on coated plastic sheets was developed. This medium proved ideally suited to the compilation of full quadrangle maps at or near publication scales. In order to exploit this technique fully it was evident that a need existed for a precision variable-ratio pantograph which could be mounted on any of the double-projection stereoplotters in use in the Geological Survey. Much of the basic information for the development of this pantograph was derived from experience gained with the fixed-ratio pantographs. This experience, and a study of the current and foreseeable trends in *C*-factors for double-projection stereoplotters, indicated that a range of reduction ratios from 1.45:1 to 6.5:1 would be adequate. An arm length of 720 mm. was selected as being of sufficient length to reach all parts of the stereomodel and yet allow freedom of motion within the supporting frame of any of the plotters. This pantograph proved to be very satisfactory for ER-55, Kelsh, and Multiplex plotters utilizing vertical photography.

Experience with this pantograph in compiling from convergent photography indicated that a longer pantograph to accommodate the wider air base would be desirable. In anticipation of the increasing use of convergent photography for stereomapping, current and future Geological Survey contracts will specify a pantograph with an arm length of 840 mm.

APPLICATION

Currently all of the Geological Survey Kelsh plotters, and many of the ER-55 and Multiplex plotters, are equipped with the 720 mm. variable-ratio pantograph. A few 840 mm. pantographs have been delivered and are mounted on ER-55 plotters compiling from convergent photography. It is intended that all double-projection stereoplotters in the Geological Survey will ultimately be equipped with precision variable-ratio pantographs of either the 720 mm. or 840 mm. type.

A considerable amount of stereocompilation at or near publication scales has been accomplished with these pantograph-equipped plotters, and this backlog of experience has indicated the many benefits accruing from their use. Some of the specific benefits are as follows:

An increase in production rates due in part to compiling at smaller scales, and in part to the technique of compilation scribing on dimensionally stable coated plastic bases.

The variable-ratio pantograph permits

uniform base-sheet scales, at a given flight height, irrespective of plotting instruments. This uniformity simplifies base-sheet preparation and edge joining, and allows greater flexibility in apportioning projects among various plotters. Uniformity of base-sheet scales within a fairly large range of flight heights is also possible.

Stereotemplets may be plotted, from the stereomodel, at the scale of the base sheet through the medium of the variable-ratio pantograph, thus simplifying the problem of providing aerotriangulation from photography at varying scales.

The *reduction of large-scale manuscripts* to suitable scales for field-completion surveys and for color-separation drafting, *may be eliminated in many cases.*

The slight but inevitable scale differences that accompany the mosaicing of small-scale negatives of large-scale paper manuscripts to a quadrangle projection *are eliminated.*

The *insignificance of minor details* on the ground which may appear map-worthy at the model scale *is easily detected* at the reduced compilation scale. Greater uniformity of topographic expression should result.

Calibration

The calibration of a variable-ratio pantograph can be analyzed mathematically.[1] Fidelity of reproduction of a geometric figure may also be used as a calibration check. Precise calibration is possible with these methods; however, several trials may be necessary to produce the desired results. The Geological Survey has developed the straight-line calibration check that is relatively simple and can be performed by the stereocompiler on a jig at the stereoplotting instrument.

A study of the geometry of the pantograph reveals that the following relationships are required for faithful reproduction:

(1) The positions of the king-post K, the drawing point B, and the tracing point T, Figure 2, projected orthographically onto the working surface, must lie in a straight line in all operating positions, and at all ratio settings.

(2) The ratio of KB to KT, Figure 2, projected onto the working surface, must be correct at all ratio settings and in all operating positions.

[1] Knight, A. S., "An Analytical Method for the Calibration of a Variable-Ratio Pantograph," PHOTOGRAMMETRIC ENGINEERING, March 1955.

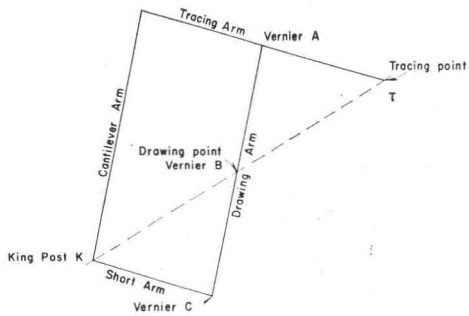

FIG. 2. Schematic drawing of pantograph.

The straight-line calibration check is designed to check these relationships in the extended as well as folded position of the pantograph.

Figure 3 shows a schematic diagram for the straight-line calibration check. A straight base-line KT is scribed on the jig, and on this base-line positions are scribed for the tracing point of the pantograph in its extended position as well as in its folded position. Crosses, representing the correct positions for the drawing point at several selected ratios, are also scribed on this base-line. The diagram indicates only the positions for the drawing point of a 720 mm. pantograph at 2:1 ratio. In practice the jig will accommodate both the 720 mm. and 840 mm. pantographs at several ratios. The scribed arc on the jig provides a means of precisely positioning point K of the jig on the extended axis of the king-post.

For the calibration procedure the jig is placed beneath the pantograph and so ori-

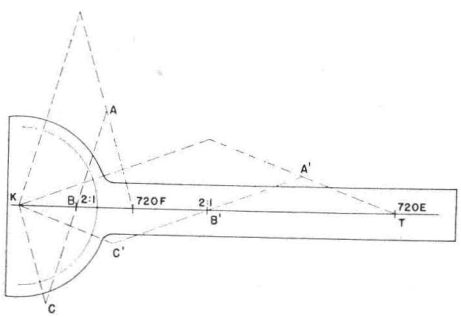

FIG. 3. Schematic drawing of pantograph calibrating jig.

ented that point K is precisely on the projected axis of the king-post. A small observing microscope with a reference cross or circle must be clamped to the short arm of the pantograph as an aid in achieving this orientation. Appropriate adjustments of the observing microscope along the short arm and of the jig beneath the pantograph will establish a position for the jig such that the arc scribed on the jig will be coincident with the arc described by the reference point of the observing microscope, as the short arm is rotated about the king-post. In this position point K of the jig is precisely on the projected axis of the king-post and the jig should be clamped to the working surface.

Pantograph scale settings which will provide a reduction ratio consistent with that of a group of points plotted on the jig are selected and the pantograph verniers set accordingly. The pantograph pencil is replaced with an observing microscope, having a reference cross or circle representing the true position of the drawing point, and the test proceeds as follows:

With the pantograph in an extended position the tracing point is precisely positioned and held at the extended point on the jig, and the relationship of the drawing point to the base-line is observed through the microscope. Any deviation is corrected by adjusting the C-vernier until the drawing point coincides with the base-line. With the pantograph folded the tracing point is positioned at the folded point on the jig, and the relationship of the drawing point to the base-line observed as before. Any deviation is corrected by adjusting the B-vernier.

These corrections should establish a true parallelogram, assuming no mechanical defect exists in the pantograph, yet the reduction ratio may be in error. The pantograph is again extended and the tracing point positioned as before. Any deviation of the drawing point from the plotted position on the jig is corrected by equal adjustments of the A-, B-, and C-verniers. With the pantograph folded, the tracing point is appropriately positioned on the folded point on the jig. The deviation of the drawing point, as defined by the observing microscope, from the true plotted position on the jig should not exceed the specified tolerance of 0.005 of an inch. Excessive deviation is an indication of some mechanical defect existing in the pantograph.

This calibration procedure should be repeated at the other ratios for which points are plotted on the jig. A convenient procedure is to perform the first calibration check at 2:1 ratio and then proceed to the larger reduction ratios.

Conclusions

The precision variable-ratio pantograph developed specifically for double-projection stereoplotters, of the anaglyphic type, has filled a long-felt need. Coupled with the techniques of compilation scribing, the efficiency and versatility of these instruments have been increased to a marked degree. Without the pantograph, compilation scribing with all its benefits would be impractical with the double-projection stereoplotters.

Although the present design of variable-ratio pantographs fulfills its major objectives, minor improvements may be expected. Further development of scale-reducing devices employing electronic principles can be anticipated and should be watched with a great deal of interest.

Large Scale Surveys

This is the title of an interesting and helpful leaflet prepared by Hunting AeroSurveys Ltd. In addition to a short statement "Large Scale Plans and Close Contouring" are a plat of "Engineering Survey at 1:480 Scale," a map of an "Industrial Site 1:1,250 with 5 Ft. Contours" and a map "Reservoir Survey, 1:1,250 with $2\frac{1}{2}$ Ft. Contours." It is understood that a copy of this leaflet can be obtained without charge by writing to Hunting AeroSurveys, Ltd. For address see its ad in this issue.