Terrence J. Keating, Ph.D.
Paul R. Wolf, Ph.D.
Frank L. Scarpace, Ph.D.
University of Wisconsin
Madison, WI 53706

An Improved Method of Digital Image Correlation*

Scanned densitometric data, and epipolar geometric principles are used to correlate corresponding imagery from stereoscopic film negatives.

Abstract: *An improved digital image-correlation system has been designed with practicality and efficiency as the major considerations. The imagery is represented within the computer as discrete density values spatially located using a scanning microdensitometer. The system is designed to better use the inherent geometric relationships between the image planes and object space in searching for conjugate imagery on overlapping photographs. Initially, two-dimensional density difference algorithms and enlarged search areas are used to correlate passpoint imagery needed to compute the relative orientation parameters of the photographic system. The epipolar geometric relationships for the stereopair are then calculated and used to better estimate the respective locations of conjugate imagery. Searching for corresponding imagery along epipolar lines, which contain only x-parallax, reduces search time significantly and improves the chances for successful correlation. Elevations are simply interpolated from match-point locations which determine the amount of image point x-parallax along these lines. The horizontal position of final object space coordinates then are determined independent of any residual y-parallax contaminating the system.*

Introduction

One of the major concerns of photogrammetrists manipulating digital data is a practical and efficient method for reducing the tremendous overburden of digits into a useful format. This study is directed specifically towards developing an efficient digital image-correlation procedure for identifying and locating conjugate imagery of overlapping aerial photographs. All external hardware normally required for photographic orientation, image-correlation, and ultimate representation is replaced by a general-purpose digital computer.

A description is given of improved correlation strategies that exploit the perspective geometric relationships found in aerial photography. Advantages of perspective epipolar geometry are included within the analytical reduction software to better balance computational and accuracy tradeoffs. Certainly the maximum efficiency of a totally automated image-matching system that generates three-dimensional terrain coordinates depends upon much more than geometric considerations. Other important factors include use of interactive programming, selection of appropriate density difference functions, and statistical reliability of a chosen match-point. These and other factors, however, are not discussed in this paper.

* Presented at the Annual Convention of the American Society of Photogrammetry, Washington, DC, March 1975.

Overview

Before explaining various specific stages in the image-matching system, it is important to give a synopsis of the overall matching philosophy and offer enough perspective to eventually link the individual parts to the whole. Figures 4 and 7, relating to two-dimensional and one-dimensional searching criteria respectively, are helpful in visualizing this summary. In this paper, *targets* are considered as arrays of density values surrounding a specific point in the left photograph of the stereopair, and *search areas* (always larger than target areas) are located in the right photograph. Search areas are *two-dimensional* when they are dimensioned larger than the target in directions of both x-parallax and y-parallax, and are *one-dimensional* when they are dimensioned larger only in the direction of x-parallax. *Density difference algorithms* such as the statistical cross-correlation coefficient are formulas devised to numerically compare a target array in the left photograph to an equal-sized array somewhere within a search area on the right photograph, in an attempt to decide whether or not both arrays are describing the same point.

Two basic steps are employed in image-matching. In the first step, sufficient numbers of points within selected passpoint locations are matched to attain a high-degree of relative orientation between photographs. This matching requires the use of two-dimensional density difference algorithms and somewhat enlarged two-dimensional search areas because little prior information regarding conjugate image locations is known. After relative orientation, the second step involves calculating the epipolar geometric relationships inherent within the stereo system. This effectively eliminates the guesswork concerning y-parallax, and image-matching may efficiently revert to searching routines along lines containing only x-parallax. Conjugate epipolar lines are determined and straight-line interpolations replace bulky equations to determine terrain coordinates. Furthermore, the horizontal location of target points are computed and independent of residual y-parallax to improve match point accuracies.

Collinearity Equations

Because of the extensive usage of the collinearity equations throughout the image-matching processes described in this paper, they will be written in general form here.

Left Photo:

$$x_L = -f \left[\frac{m_{11}(X_P - XC_L) + m_{12}(Y_P - YC_L) + m_{13}(Z_P - ZC_L)}{m_{31}(X_P - XC_L) + m_{32}(Y_P - YC_L) + m_{33}(Z_P - ZC_L)}\right] \quad (1)$$

$$y_L = -f \left[\frac{m_{21}(X_P - XC_L) + m_{22}(Y_P - YC_L) + m_{23}(Z_P - ZC_L)}{m_{31}(X_P - XC_L) + m_{32}(Y_P - YC_L) + m_{33}(Z_P - ZC_L)}\right] \quad (2)$$

Right Photo:

$$x_R = -f \left[\frac{m'_{11}(X_P - XC_R) + m'_{12}(Y_P - YC_R) + m'_{13}(Z_P - ZC_R)}{m'_{31}(X_P - XC_R) + m'_{32}(Y_P - YC_R) + m'_{33}(Z_P - ZC_R)}\right] \quad (3)$$

$$y_R = -f \left[\frac{m'_{21}(X_P - XC_R) + m'_{22}(Y_P - YC_R) + m'_{23}(Z_P - ZC_R)}{m'_{31}(X_P - XC_R) + m'_{32}(Y_P - YC_R) + m'_{33}(Z_P - ZC_R)}\right] \quad (4)$$

In the collinearity equations, f is the focal length, the m's are rotation parameters of the left photograph, and primed m's are rotation parameters for the right photograph. In addition, x and y refer to photographic fiducial axis coordinates and XC, YC, and ZC the exposure station coordinates of either the left or right photograph. Figure 3 illustrates the condition of collinearity as it applies in this paper. Equations 1, 2, 3, and 4 are arbitrarily written to express the object space axis system in the datum plane. The X model axis is in the vertical plane containing the left photographic fiducial x-axis and the Y model axis is perpendicular to X at the datum nadir point of the left photograph. It should be noted, however, that these equations are easily modified to enable the model coordinate system to assume any convenient orientation and position. In Figure 3, the two lines $C_L pP$ and $C_R p'P$ pass through their respective exposure stations and image points and meet at

P, a common object point. Model coordinates X_P, Y_P, and Z_P are common to the four equations and serve to link the left image to that of the right. The collinearity equations will be continually referenced throughout the balance of this paper.

Input Considerations

The first input consideration is to adequately describe a pair of overlapping aerial photographs to the computer. The procedure initially requires a conversion of analogic photographic input imagery to a numerically or digital equivalent format. This conversion is made with a scanning microdensitometer, a device which scans the black-and-white (or color) film negative with a select spot of light whose grid position on the film is known and recorded. The ratio of the light intensity transmitted through the film compared with the clear air signal is analogically detected, logarithmically amplified, and then converted to a corresponding digital integer value. The range of numerical values and spacing of grid sampling points are chosen to offer desired image fidelity and positional accuracy commensurate with the expected usage of the end product.

Scan Direction

For the image-matching system under consideration, scanning in a direction parallel to the airbase on each negative is very advantageous, although not necessary. The effect of this scan configuration, shown in Figure 1, is to minimize *kappa* rotation in later orientation, thus allowing scan lines to lie nearly parallel to epipolar lines. Optimally, scans along epipolar lines (an epipolar line is the line of intersection between the plane of the photograph and a plane containing the airbase and an object point) are most efficient, but this requires knowledge of the relative orientation parameters and specialized scanning equipment. Figure 2 shows the scanned portion of two photographs scanned approximately parallel to the airbase. The advantage of this scan configuration will be made clear later.

Conjugate Passpoint Estimator

The principal and conjugate principal points are useful for approximating the relative orientation of the stereopair, thus assisting in pinpointing search area locations for selected passpoint targets. In Figure 1, parameters B_1, B_2, D_1, and D_2 are measured with an engineer's scale. These are then used to estimate the location of the unknown orientation parameters of the right photographic exposure station with respect to the left. Values for D_1 or D_2 are negative if either lies below the fiducial x-axis. The equations to determine *kappa*, XC, YC, and ZC of the right exposure station are derived from the parallax equations assuming vertical photography and are equated below without proof.

$$Kappa = \tan^{-1}\left[2(D_1+D_2)/(B_1+B_2)\right] \quad (5)$$
$$XC_R = XC_L + \left[(B_1+B_2)/2\right]\left[H/f\right] \quad (6)$$
$$YC_R = YC_L + (D_1)(H)/f \quad (7)$$
$$ZC_R = ZC_L\,(B_1/B_2) \quad (8)$$

In these equations, f is the focal length and H is an assumed flying height above datum to be used in relative orientation.

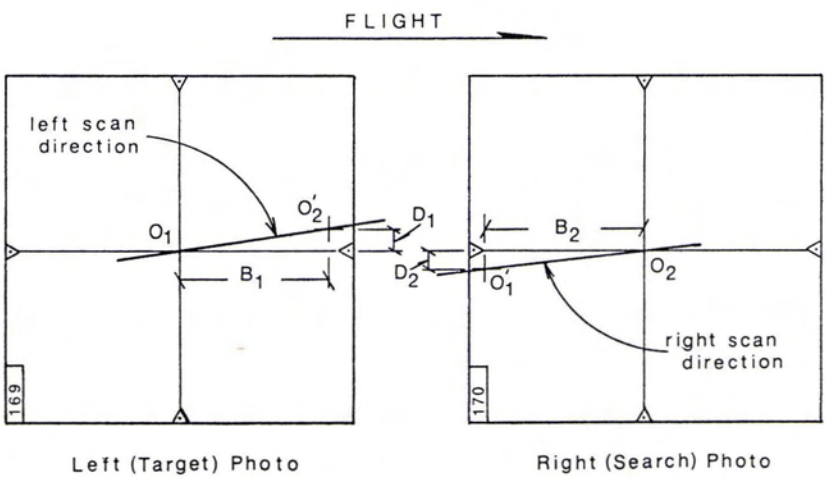

FIG. 1. Desirable scan line orientations as they relate to the photographic principal and conjugate principal points.

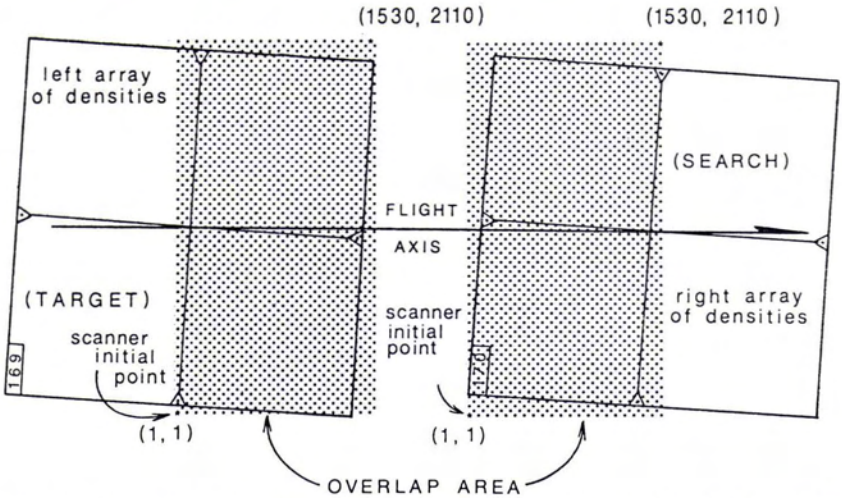

FIG. 2. Two-dimensional density array configuration of a pair of overlapping aerial photographs. Scanner initial points are at lower left corner with coordinates (1,1) for each photograph.

An estimated ground elevation for each target passpoint, the approximate exposure station parameters between temporarily assumed vertical photographs, and the collinearity equations are all that are necessary to compute approximate locations of conjugate passpoints. Knowing x_L, and Z_P for a specific desired passpoint location, an inverse solution involving two equations and two unknowns is made for X_P and Y_P in equations 3 and 4 along with the approximated right exposure parameters as knowns, image coordinates x_R and y_R are determined. This technique serves the image-matching system well as a search location estimator. The same idea, it will be shown, is used after the refined relative orientation parameters are known to determine epipolar lines. Attention first is turned to performing passpoint correlation and solving for these refined relative orientation parameters.

Two-Dimensional Image Correlation

It is important to provide for a strong relative orientation in order to accurately determine the parameters for searching along epipolar lines. For this reason considerable time is spent during the search for conjugate passpoints to assure desired accuracy. The system presently accepts up to 60 passpoints, and provides several built-in rejection criteria to safeguard against poorly matched passpoints. The relative orientation program is fully partitioned allowing easy passpoint rejection, and allows for the solution of many passpoints at little additional computational burden. Redundant information is utilized to offset the inherent limitation of describing discrete points as arrays representing, at best, a spot area on the ground.

Figure 3 shows the optimum passpoint locations chosen internally within the program. Each circle represents a group of passpoints, and five of the six standard passpoint locations have two groups of passpoints indi-

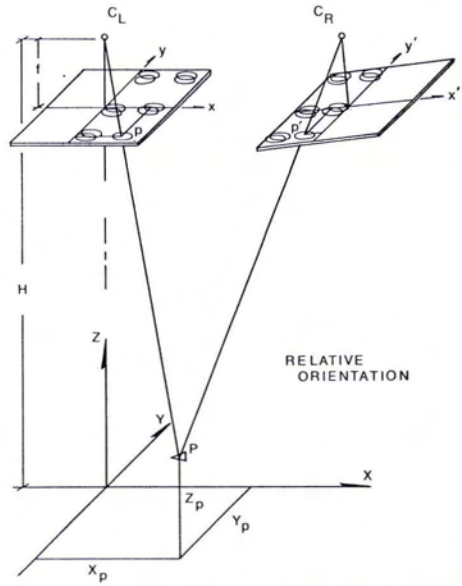

FIG. 3. Passpoint selection and relative orientation.

cated. Within each group, any number of passpoint targets can be selected and matched to serve in relative orientation. If, for example, there are 11 passpoint group areas selected, and four passpoint targets are chosen within each area, the system will have 44 passpoints available for the solution of exposure station orientation parameters.

SEARCHING IN TWO-DIMENSIONAL SPACE

Figure 4 depicts the two-dimensional search routine operation, using as an example a five-row-by-five-column passpoint target selected from the passpoint group located near the center of the left photograph. This target represents an image point 1242 scans and 469 elements from the scanner initial point (shown in Figure 2) on the left photograph. The estimated search area location, assumed to contain the conjugate target image, is indexed in the lower left corner at 1140 scans and 144 elements of the right photograph. The search area is 15 rows by 15 columns in this example, but normally can be on the order of 50 rows by 50 columns with a maximum of 100 rows by 100 columns. The search area need not be square.

The target contains integers representing the actual gray-shade densities surrounding the circled center point. The search area, although represented by blank squares, is also filled with integer densities representing image densities in the right photograph. For each column and row *lag position*, imagine the target being superimposed upon the search area. Lag position is the number of columns and the number of rows that the lower left target element is offset from the lower left search area element. The shaded portion of the search area represents the target at column lag position eight and row lag position eight. At each position, corresponding density integer values are compared by using a density difference algorithm. That lag position indicating the strongest similarity in density and arrangement is chosen as the conjugate match point. (The match acceptance or rejection criteria, although extremely important, will not be discussed.)

The use of passpoints in groups allows easier detection of passpoint mismatches. Often when one passpoint is mismatched, the entire group is suspect. The relative orientation is able to reject individual passpoints or entire groups of passpoints until orientation to the desired accuracy is achieved. After the parameters for the exposure stations have been determined, the system is ready to revert to one-dimensional searching in order to match the remaining imagery. The idea of epipolar geometry is discussed next to introduce concepts necessary for providing this convenience.

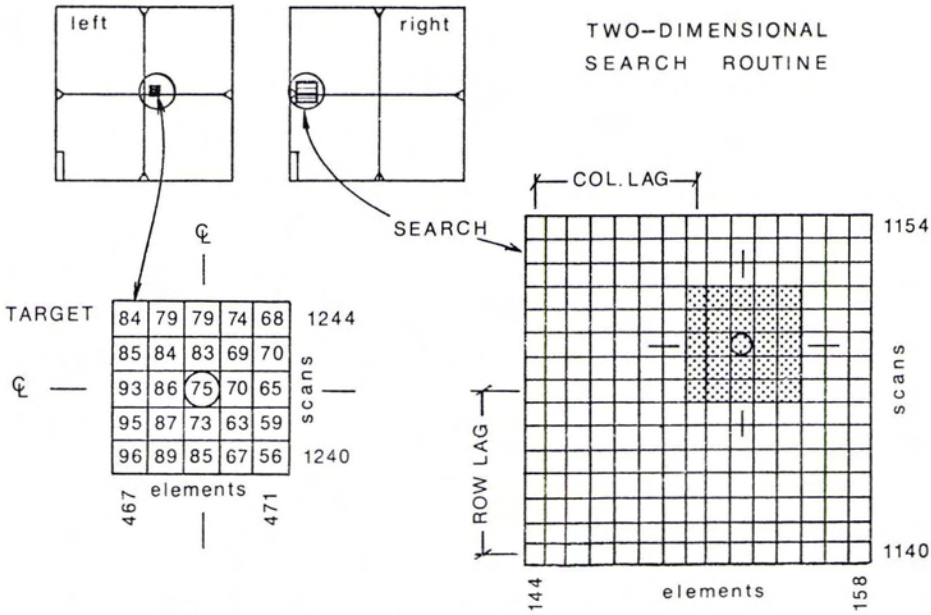

FIG. 4. Search routine in two-dimensional space. A 5-by-5 target array lagged within a 15-by-15 search array is depicted.

Epipolar Geometry

Image comparison is greatly simplified if one keeps in mind the geometric configurations present between image planes and object space. These relationships are easily applied by using specialized perspective geometric techniques that some photogrammetrists call coplanarity and others call epipolar geometry. The relationships important to this discussion are shown in Figure 5. In this simplified sketch, the epipolar axis is another term for the airbase, the line joining exposure stations. Recall that the condition of collinearity requires the exposure station, image point, and object point to lie along the same straight line. In Figure 5, these collinear lines form the edges of the epipolar plane. The epipolar plane, which depicts the condition of coplanarity, contains by definition the epipolar axis, the image points p and p', and the corresponding object point P. The lines of intersection between the epipolar plane and the two photographic image planes are called conjugate epipolar lines. With these terms in mind, the utility of these relationships can be explained.

The most important concept of epipolar geometry to be realized in image-matching is that conjugate imagery is always found along conjugate epipolar lines, regardless of photographic orientation. Exactly where a conjugate image point is found along the conjugate epipolar line is dependent only upon the elevation of the object point. Points situated on epipolar lines are void of y-parallax. What remains along any epipolar line is x-parallax, which of course determines elevation.

An explanation of the method used to locate conjugate epipolar lines using the collinearity equations will help explain the advantages of epipolar geometry, and serves to introduce the techniques involved in one-dimensional searching methods.

One-Dimensional Image Correlation

If a conjugate point is known to lie along a predetermined line, the search routine becomes one-dimensional. The reduced search area saves huge amounts of computational repetitiveness and often provides for a more reliable match-point.

EPIPOLAR LINE DETERMINATION

The determination of conjugate epipolar lines is explained with the aid of Figure 6. In the procedure used, only a simple manipulation of the collinearity equations is used to generate conjugate epipolar lines. This approach is preferred over other methods because a single targeted image point can locate conjugate epipolar lines.

The steps for locating conjugate epipolar lines, given a single target point and matrix methods of solutions (refer to Figure 6) are—

(1) Given the relative orientation parameters of the left photograph and the x and y image coordinates of target point a, first solve the collinearity equations 1 and 2 inversely for the X and Y coordinates of point A_1 using an elevation Z_1. The solution involves two equa-

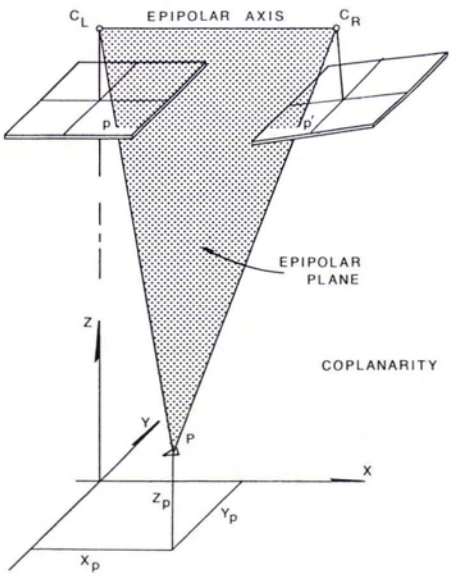

Fig. 5. An epipolar look at coplanarity.

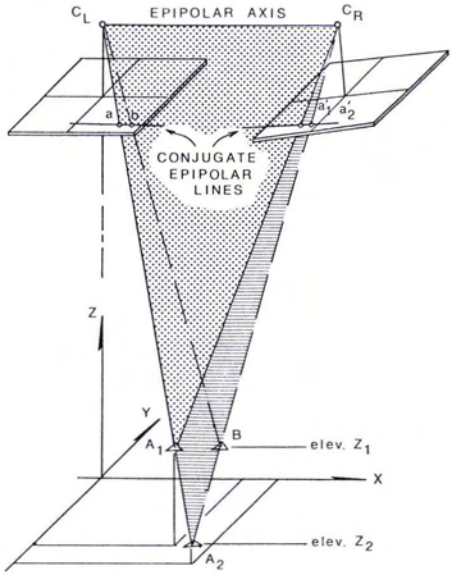

Fig. 6. Method for determining conjugate epipolar lines.

tions and two unknowns. Next choose a new model elevation Z_2 and again solve for the model coordinates of point a, at model position A_2. Note that a change in elevation affects the horizontal model position of image point a.

(2) Given the relative orientation parameters of the right photograph and the now-known model coordinates of A_1, solve collinearity equations 3 and 4 directly for the right photographic image coordinates of a'_1. Point a'_1 by definition lies along an epipolar line conjugate to a yet undetermined line in the left photograph which contains a. In similar fashion, determine the right image coordinates of a'_2 using model point A_2 and its model coordinates.

(3) The coordinates of right photographic image points a'_1 and a'_2 describe the right epipolar line containing the conjugate point of a as chosen in the left photograph. This line is at the intersection between the epipolar plane containing A_1 and A_2 and the right photograph.

(4) What remains now is to describe an additional point in the left photograph to give direction to the left epipolar line passing through point a. This is done by working the process in reverse. Starting at point a'_2 in the right photograph, we could easily relocate point a by determining model coordinates of A_2 using elevation Z_2 and equations 3 and 4 inversely. Then we could solve for image coordinates of a using equations 1 and 2 directly. However, reassigning for image point a'_2 a model elevation of Z_1 and solving equations 3 and 4 inversely locates point B across from A_1. Using these model coordinates and equations 1 and 2 directly locates a second image point b along the epipolar lines passing through the original point a.

Elevations Z_1 and Z_2 control the location of the endpoints used to describe the conjugate epipolar lines. The elevation initially assigned to Z_1 corresponds to that of a nearby passpoint elevation and later depends upon previously determined image model elevations to properly locate the epipolar endpoints. Elevation Z_1 in conjunction with Z_2 serves to describe only that length of epipolar lines which is needed to span localized portions of the respective images. All targets along the left epipolar line can be matched to their respective conjugate images along the right conjugate epipolar line before new lines need be computed. In general, the number of sets of conjugate epipolar lines that must be generated roughly corresponds to the number of scans needed to cover the photograph.

SEARCHING IN ONE-DIMENSIONAL SPACE

Although epipolar lines are used to determine target and search centerpoint locations, the arrays used to describe these locations are formed by elements located along scan lines. Figure 7 is a schematic of targeting and

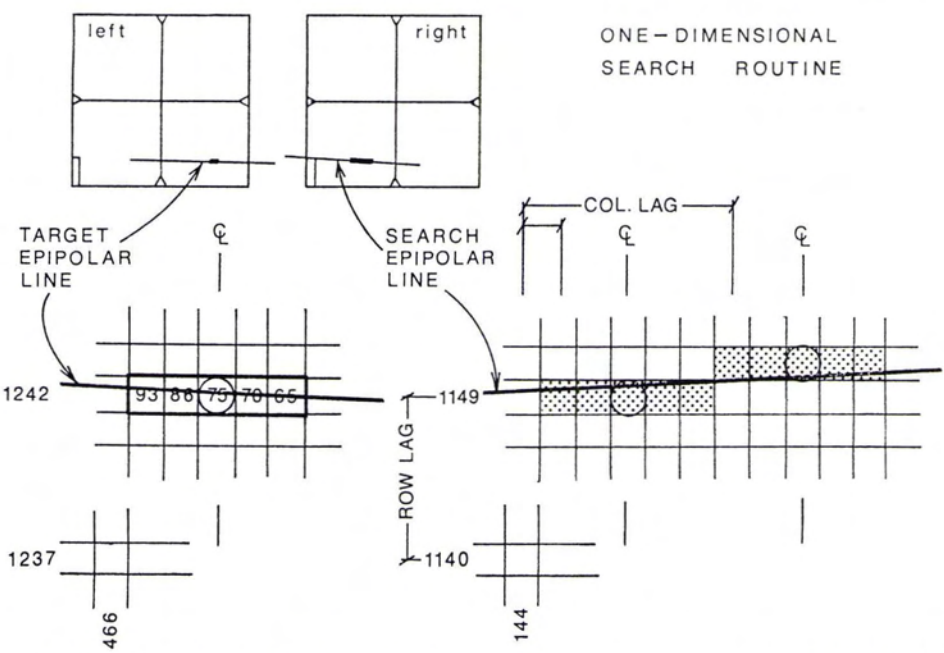

FIG. 7. Search routine in one-dimensional space. The array centers are determined by the epipolar lines but arrays are along original scan lines.

searching in one-dimensioanl space. The example target contains one row of five density values and is centered along the target epipolar lines at 1242 scans and 469 elements from the scanner initial point. The search area is incremented along the conjugate epipolar search line and is made up of densities along that scan line closest to the search center. Since the scans were oriented nearly parallel to the airbase, there is good agreement between epipolar lines and scan lines. Excessive jumping across scan lines during searches becomes a burden when indexing future search areas for subsequent points.

After the chosen target's conjugate point is matched using density algorithms, the target is incremented one column position and the search area is re-centered one column position over from the previous successful match point and a new match point is determined.

The success of this pure one-dimensional search routine depends upon the exactness of the relative orientation parameters. If an excess of y-parallax exists from relative orientation, the true search area may be other than along the conjugate epipolar line. To check for y-parallax, several targets are selected near each endpoint of the target epipolar line. These points are then searched in two-dimensional mode within search areas which include the conjugate epipolar line. If the chosen image match-points near each of the endpoints of the computed search epipolar line are not along the line, y-parallax exists. This y-parallax is either eliminated by slightly shifting the conjugate epipolar line or by requesting an update on the relative orientation parameters. For those situations involving minor y-parallax, the target is expanded to contain perhaps three scans, but remains centered on the left epipolar line. The search area is expanded to accommodate a two-dimensional target but is still incremented only in the direction of x-parallax.

SEPARATION OF MODEL X AND Y FROM Z IN THE SYSTEM

If excessive y-parallax is present in the model due to poor relative orientation, it would be convenient to prevent this parallax from contaminating the resultant terrain coordinates. In relative orientation for exam-

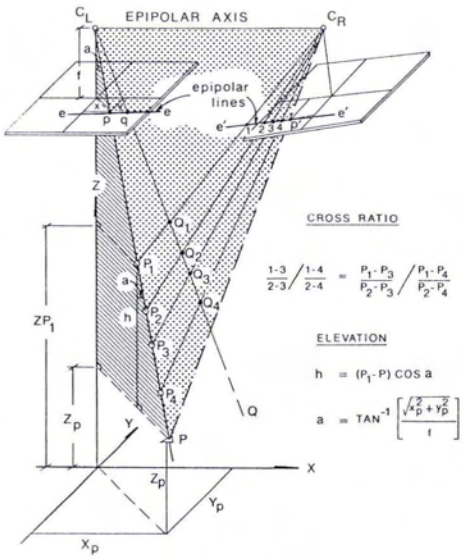

FIG. 8. Elevation interpolation from epipolar lines.

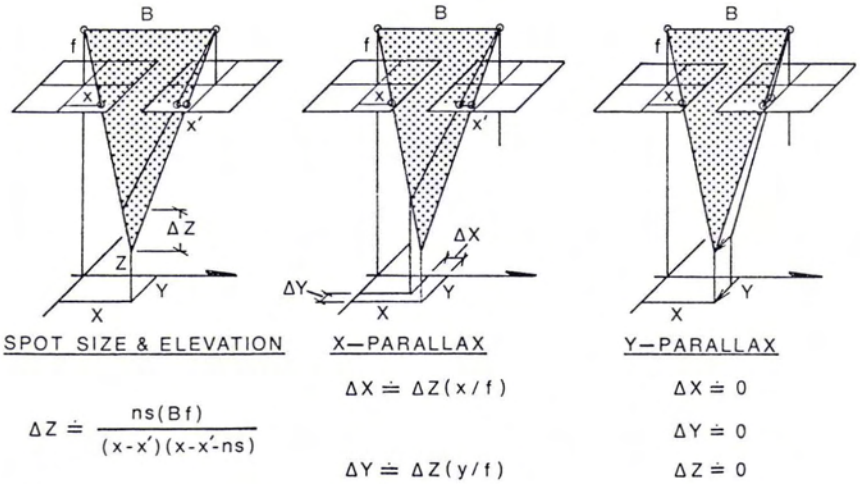

FIG. 9. Effects of spot size, x-parallax and y-parallax on model coordinates.

ple, as exposure station parameters are determined, remaining unknown model points are also being solved using equations 1, 2, 3, and 4 which determine model coordinates X_P, Y_P, and Z_P. Thus any residual y-parallax will contaminate the solution of unknown points. This can be avoided if the elevation determination is separated from X and Y.

In the one-dimensional image matching system only the left photograph determines X_P and Y_P model coordinates. The elevation is determined based upon the location of the conjugate point along the conjugate epipolar line in the right photograph. With the elevation Z_P determined, the collinearity equations 1 and 2 can be solved inversely to determine where the image ray intersects the model space at Z_P.

Figure 8 shows how a difference in elevation is determined solely from position along epipolar lines. Fortunately the ultimate elevation of a selected match point can be interpolated knowing the elevation Z_{P_1} used to determine one endpoint of the conjugate epipolar line. Using the basic law of projectivity, that being the theory of the cross-ratio, it can be seen that elevation differences along a collinear line extending from the left photograph are related to distances along the search epipolar line where the match point is ultimately determined. Once a match point is determined, its corresponding elevation is determined by simple ratio. Using this elevation in equations 1 and 2 which describe the line from the left exposure station through the target point to where it intercepts the model at Z_P, the horizontal model coordinates are obtained.

Although y-parallax is effectively prevented from further contaminating the spatial location of spots imaged on the left photograph, the same is not true when mismatches occur in the direction of x-parallax. Figure 9 shows the effects of both x-parallax and y-parallax, expressed in terms of the whole number of decimal spot size of displacements *(ns)* upon the model X, Y, and Z coordinates. In the figure, B is the distance between exposure stations and f is the focal length. The image target coordinates x and y, as well as the conjugate match-point x' value, are needed to locate the point within the model space. The error expressions given are approximate in that they assume vertical photography.

Elevation differences caused by x-parallax as seen in Figure 9 (center) affect X and Y of the model depending upon the location of the image in the left photograph. The effect of elevation on horizontal positioning is most severe at the edges of the model area. Note, for example, that the ground spatial coordinates of the left photographic principal point image are unaffected by errors in elevation. Figure 9 (right) indicates that although y-parallax is present, its effect is eliminated in the determination of the model coordinates. Since the X and Y coordinates are determined from the left exposure station parameters only, and y-parallax has no effect on elevation differences, this statement is true. However, as is often the case, differences in y-parallax in one-dimensional search methods could lead to mismatches of imagery along the direction of x-parallax. Expanding target sizes while retaining one direction of search is a reasonable compromise to this problem.

Conclusion

Many other comments and suggestions regarding strategies in digital image-matching can be made concerning computational shortcuts, mass storage requirements, density difference algorithms, other perspective geometrical advantages, utility of the system, application, cost, etc. This paper, however, is limited only to an explanation of some basic geometrical considerations for achieving a practical solution to image-matching on densitized aerial photographs. Other solutions to the same problem have been used and are working. They possess various advantages and disadvantages in comparison to the method presented herein.

The final evaluation of any image-matching system can only be made after implementation into a useful applications system. Terrain coordinates derived from this or any other system must meet the cost and accuracy requirements dictated by the ultimate user.

Acknowledgment

This particular image-matching system has been developed for application in automated shoreline erosion studies. The research was sponsored by the University of Wisconsin Sea Grant Program, part of the National Sea Grant Program maintained by the National Oceanic and Atmospheric Administration of the United States Department of Commerce.

References

Analysis and Development of Digital Mapping System Software, Final Report, USAETL Contract No. ETL-CR-74-5, Control Data Corporation, Minneapolis, Minnesota, May, 1974.

Digital Mapping System: Mathematical Processing, Final Technical Report, USAETL Contract No. ETL-CR-74-6, Keuffel and Esser Company, Morristown, New Jersey, May, 1974.

Digital Mapping System Study, Final Technical Report, USAETL Contract No. DAAK02-71-C-0079, Keuffel and Esser Company, Morristown, New Jersey, October, 1971.

Gambino, Lawrence A., and Michael A. Crombie, "Digital Mapping and Associated Digital Image Processing", *Proceedings American Society of Photogrammetry*, St. Louis, March, 1974.

Hallert, Bertil, *Photogrammetry*, McGraw-Hill, London, 1960.

Helava, U. V., and W. E. Chapelle, "Epipolar-Scan Correlation", *Bendix Technical Journal*, Spring, 1972.

Helava, U. V., J. A. Hornbuckle, and A. J. Shahan Jr., "Digital Processing and Analysis of Image Data", *Bendix Technical Journal*, Spring, 1972.

Keating, Terrence J., "Analytical Photogrammetry From Digitized Image Densities." *Ph.D. Thesis*, University of Wisconsin, Madison, May, 1975. (Available through University Microfilms, Ann Arbor, Michigan.)

Keating, Terrence J., "Testing the Hadamard Transform Image Correlation Technique", *Unpublished paper*, Department of Civil and Environmental Engineering, University of Wisconsin, December, 1973.

Masry, S. E., "Digital Correlation Principles", *Photogrammetric Engineering*, Vol. 40, No. 3, March, 1974.

Mayer, John D., "A New Development in Military Mapping", *Presented paper*, American Society of Photogrammetry Convention, St. Louis, March, 1974.

Optimized Digital Automatic Map Compilation System, Final Technical Report, GIMRADA Contract No. DA-44-009 AMC-111 (X), International Business Machines Corporation, Federal Systems Division, Rockville, MD, July, 1964.

Phillips, Dennis R., and Eric A. Smith, "Automated Cloud Tracking Using Precisely Aligned Digital ATS Pictures" *IEEE Transactions on Computers*, Vol. C-21, No. 7, July, 1972.

Wolf, Paul R., *Elements of Photogrammetry*, McGraw-Hill, New York, 1974.

XIII International Congress of Photogrammetry July 11 to July 23, 1976

Exhibits, Technical Tours, Social Events. Technical Conferences.
Write now to the Congress Secretariat for advance registration forms.

Presented Papers

The submission of Invited Papers, Working Group Papers, Commission Reports, and National Reports to the ISP Congress is arranged by the various Commission Presidents or National Societies. Anyone, however, may submit Presented Papers. The format for papers is 210 by 297 mm with a type area of 150 by 240 mm. The cover page of the paper will include:

- XIII Congress of the International Society for Photogrammetry Helsinki 1976
- Relevant Numbers of Commission and Working Group
- UDC Number (Universal Decimal Classification)
- Presented Paper

One copy of the abstract will be sent to the appropriate Commission President (see Yearbook issue) and one to the Congress Secretariat by February 1, 1976. Three hundred copies of the paper itself should reach the Congress Secretariat by May 15, 1976 and an additional 1500 copies must reach the Congress Secretariat by June 15, 1976. The address of the Congress Secretariat is:

ISP CONGRESS HELSINKI 1976
Secretariat/Publications
Commission No.
SF-02150 ESPOO 15
Finland